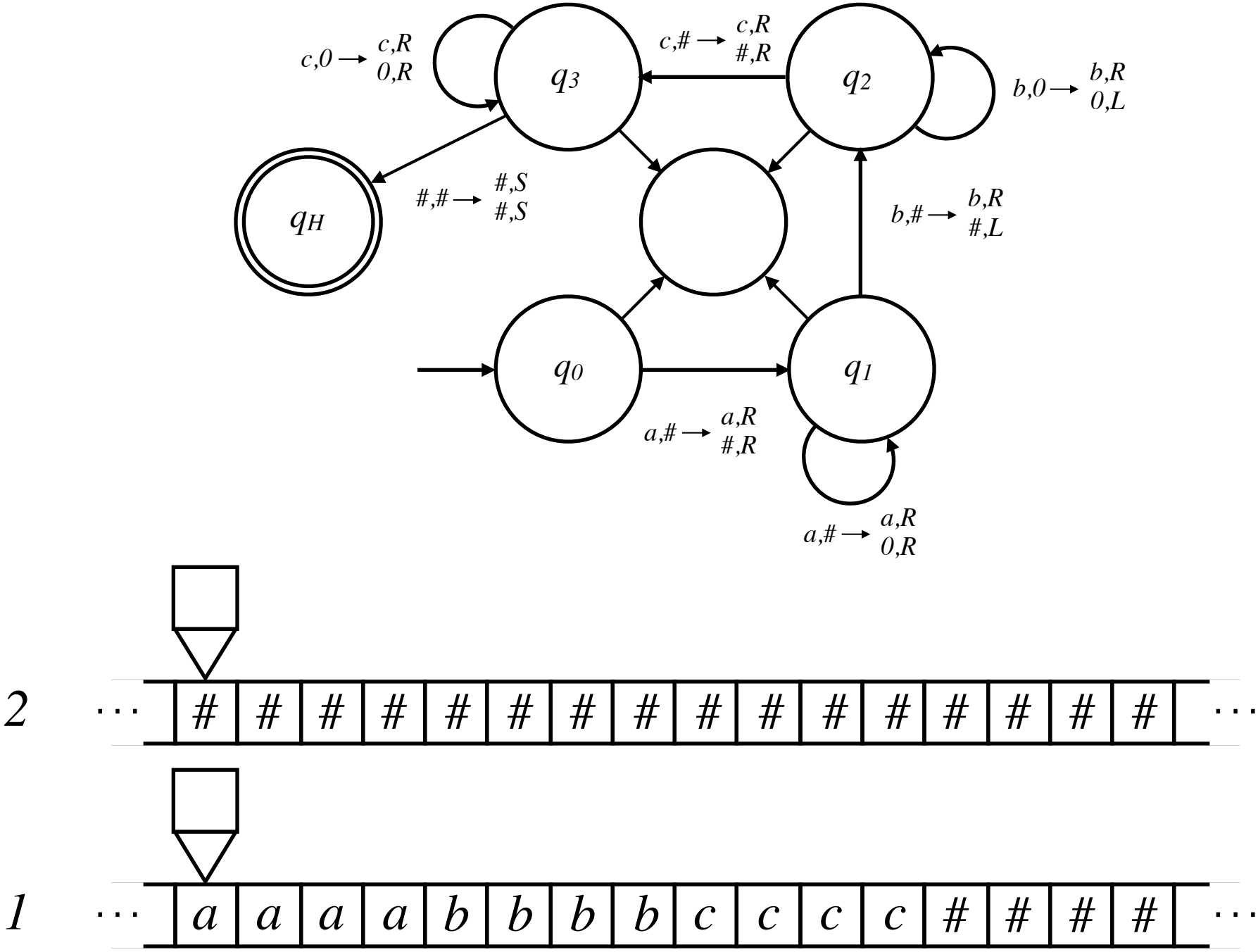
c,0 → c,R 0,R
c,# → c,R #,R
b,0 → b,R 0,L
#,# → #,S #,S
b,# → b,R #,L
a,# → a,R #,R
a,# → a,R 0,R
q3
q2
qH
q0
q1
2
1
# # # # # # # # # # # # # # # #
a a a a b b b b c c c c # # # #

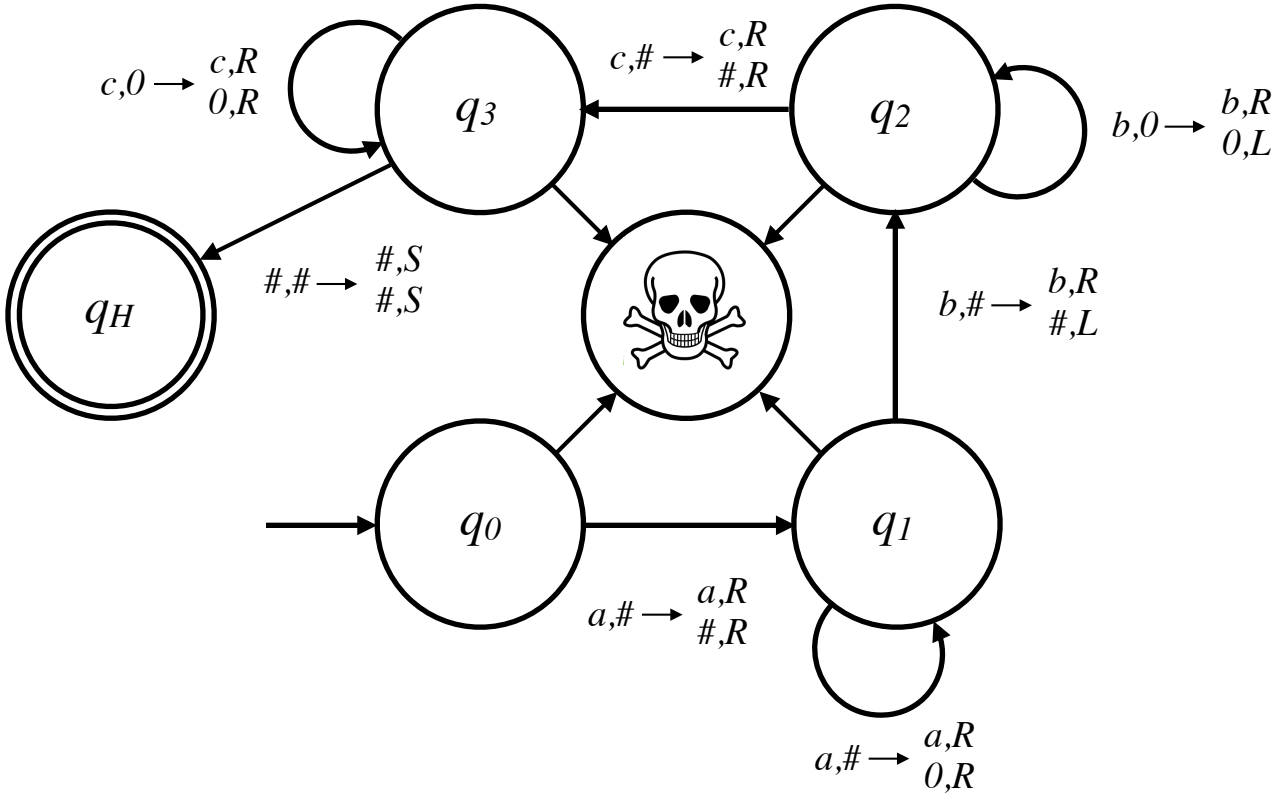
c,0 → c,R 0,R
q3
c,# → c,R #,R
q2
b,0 → b,R 0,L
qH
#,# → #,S #,S
b,# → b,R #,L
q0
q1
a,# → a,R #,R
a,# → a,R 0,R

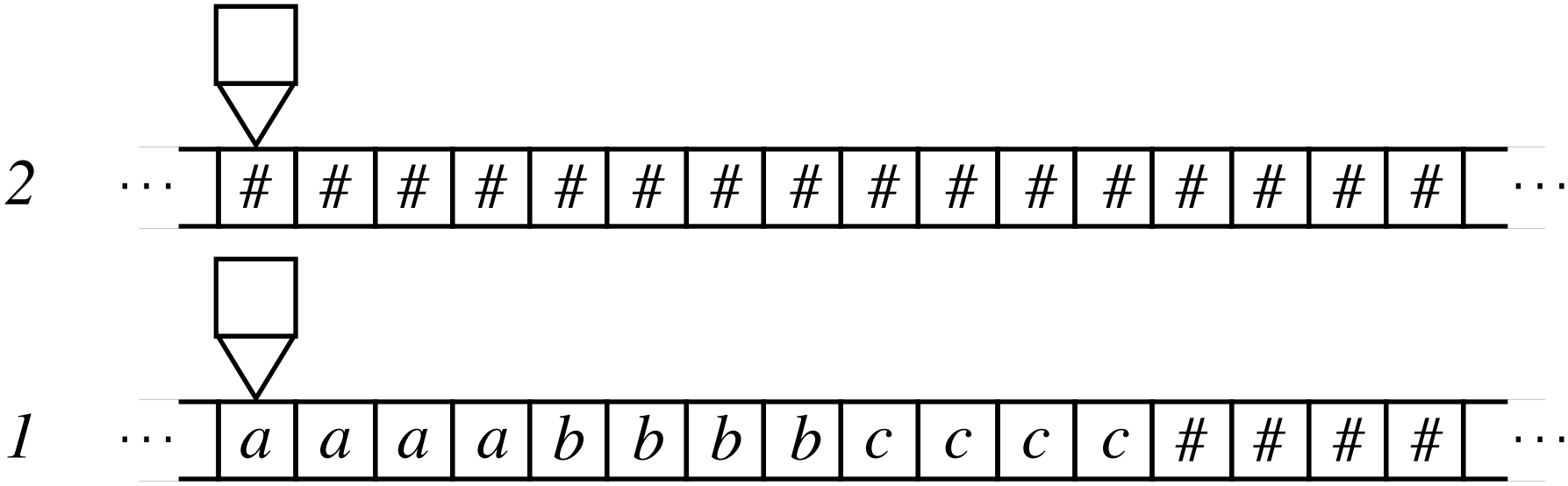
2
# # # # # # # # # # # # # # # # #
1
a a a a b b b b c c c c # # # #

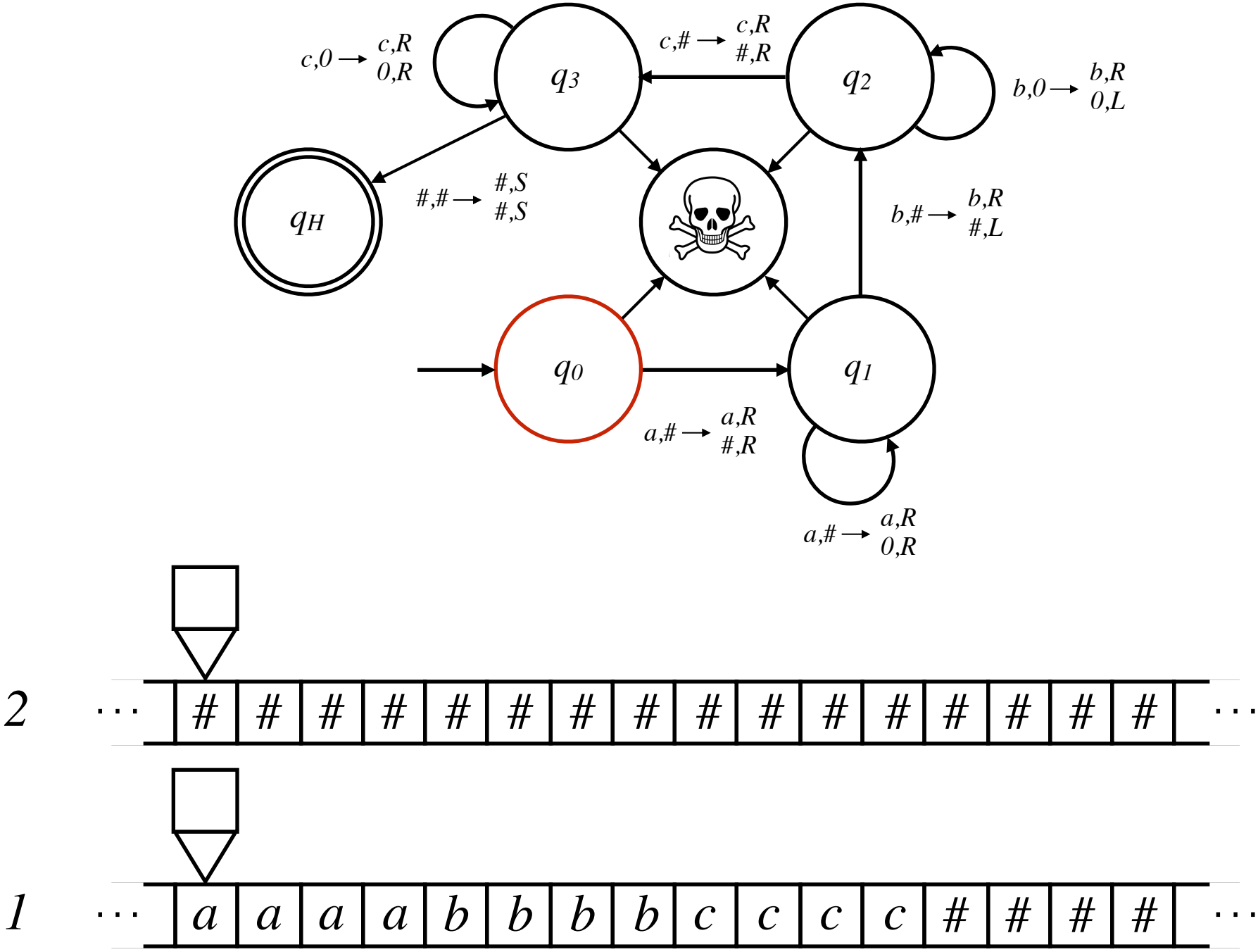
c,0 → c,R 0,R
c,# → c,R #,R
b,0 → b,R 0,L
#,# → #,S #,S
b,# → b,R #,L
a,# → a,R #,R
a,# → a,R 0,R
q3
q2
qH
q0
q1
2
1
# # # # # # # # # # # # # # # # #
a a a a b b b b c c c c # # # #

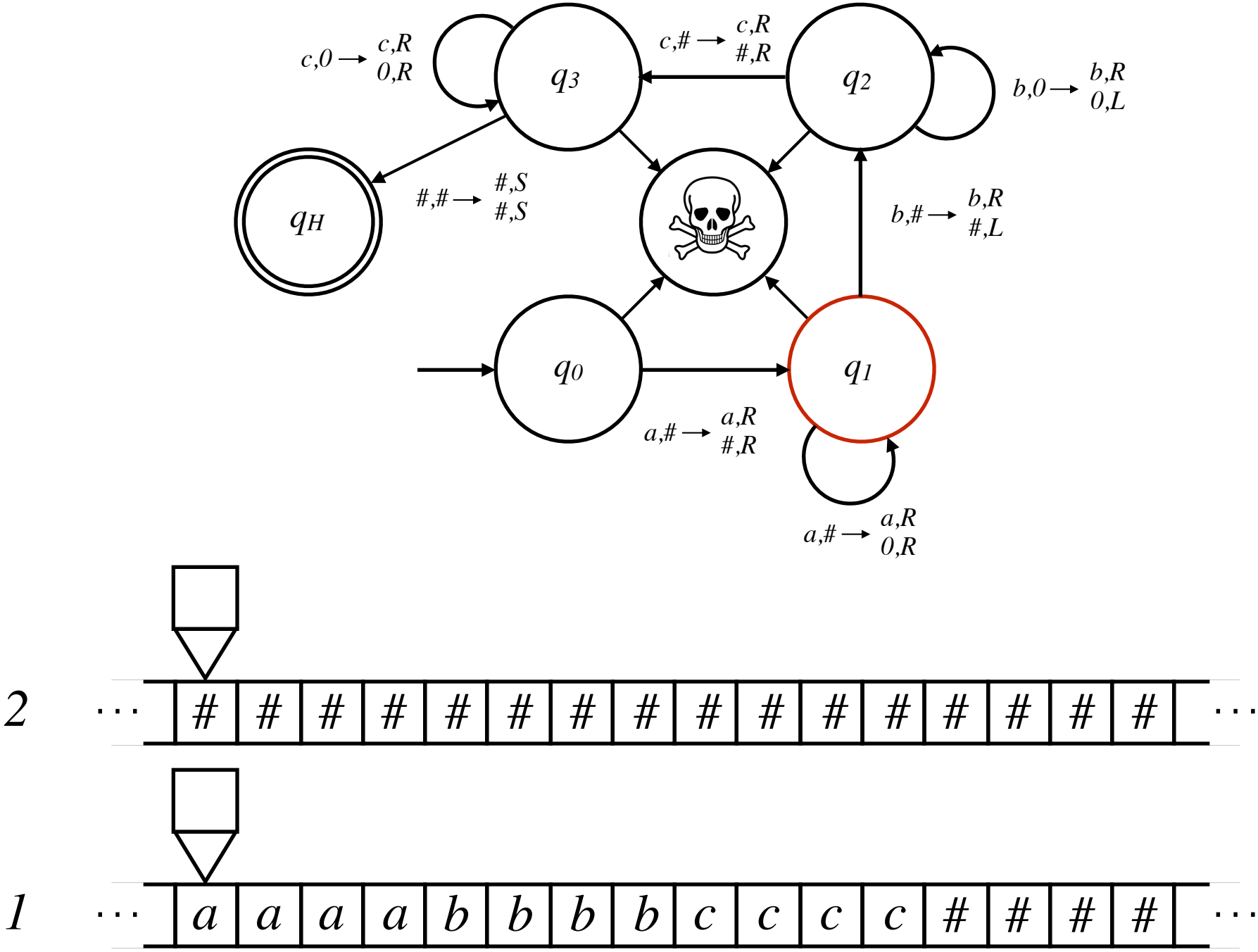
c,0 → c,R 0,R
q3
c,# → c,R #,R
q2
b,0 → b,R 0,L
qH
#,# → #,S #,S
b,# → b,R #,L
q0
q1
a,# → a,R #,R
a,# → a,R 0,R
2
# # # # # # # # # # # # # # # # #
1
a a a a b b b b c c c c # # # #

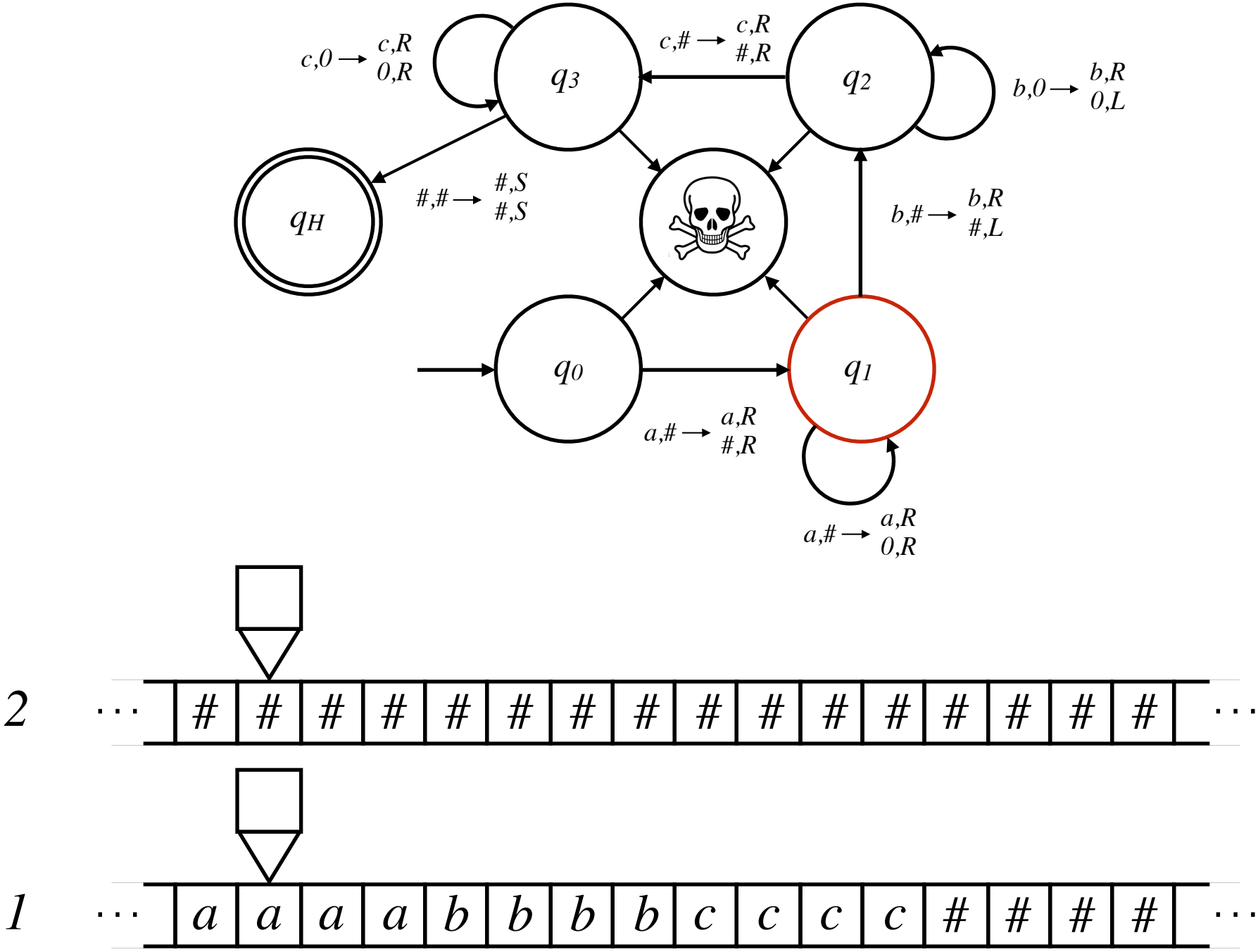
c,0 → c,R 0,R
q3
c,# → c,R #,R
q2
b,0 → b,R 0,L
qH
#,# → #,S #,S
b,# → b,R #,L
q0
q1
a,# → a,R #,R
a,# → a,R 0,R
2
# # # # # # # # # # # # # # # # #
1
a a a a b b b b c c c c # # # #

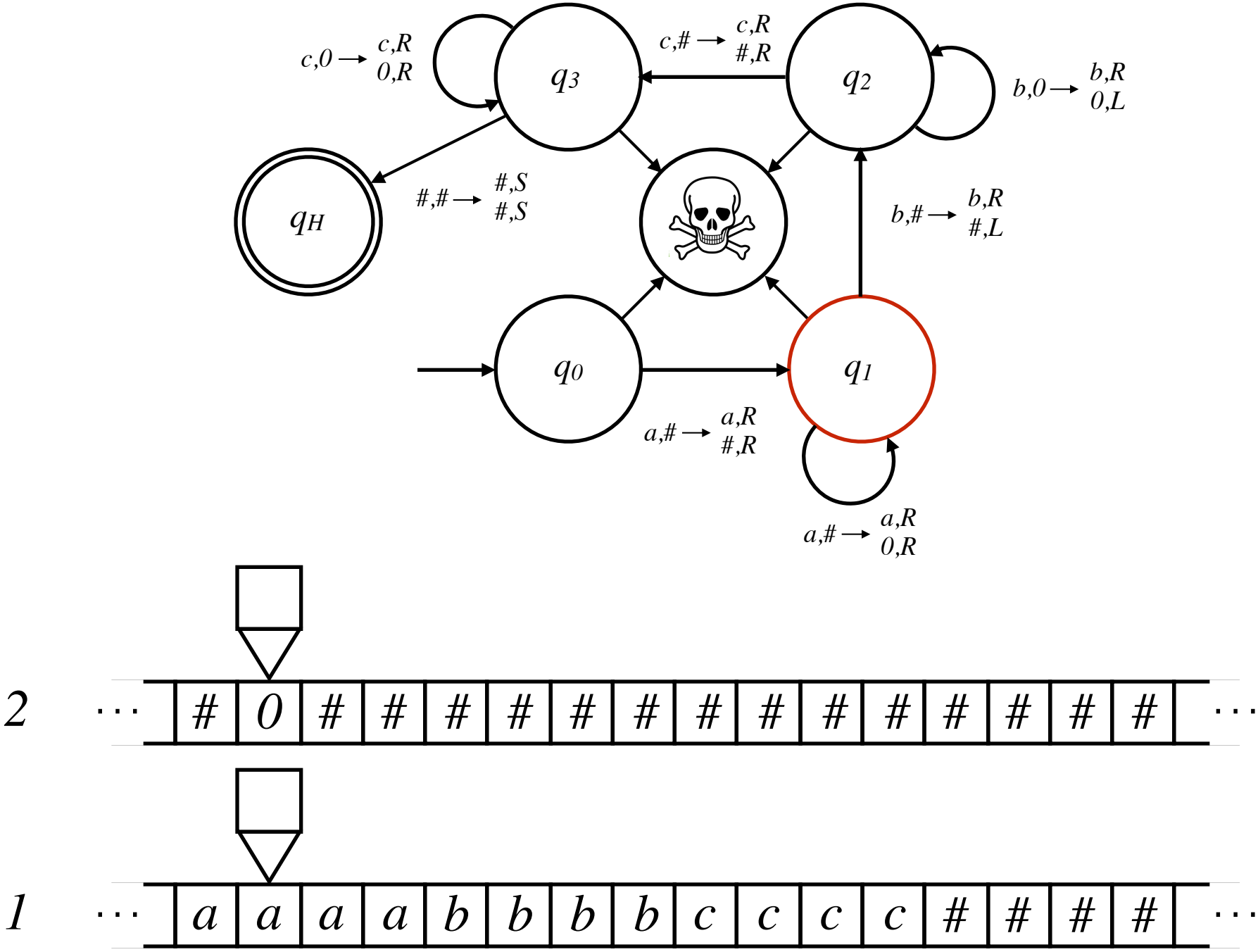
c,0 → c,R 0,R
q3
c,# → c,R #,R
q2
b,0 → b,R 0,L
qH
#,# → #,S #,S
b,# → b,R #,L
q0
q1
a,# → a,R #,R
a,# → a,R 0,R
2
0 # # # # # # # # # # # # # #
1
a a a a b b b b c c c c # # # #

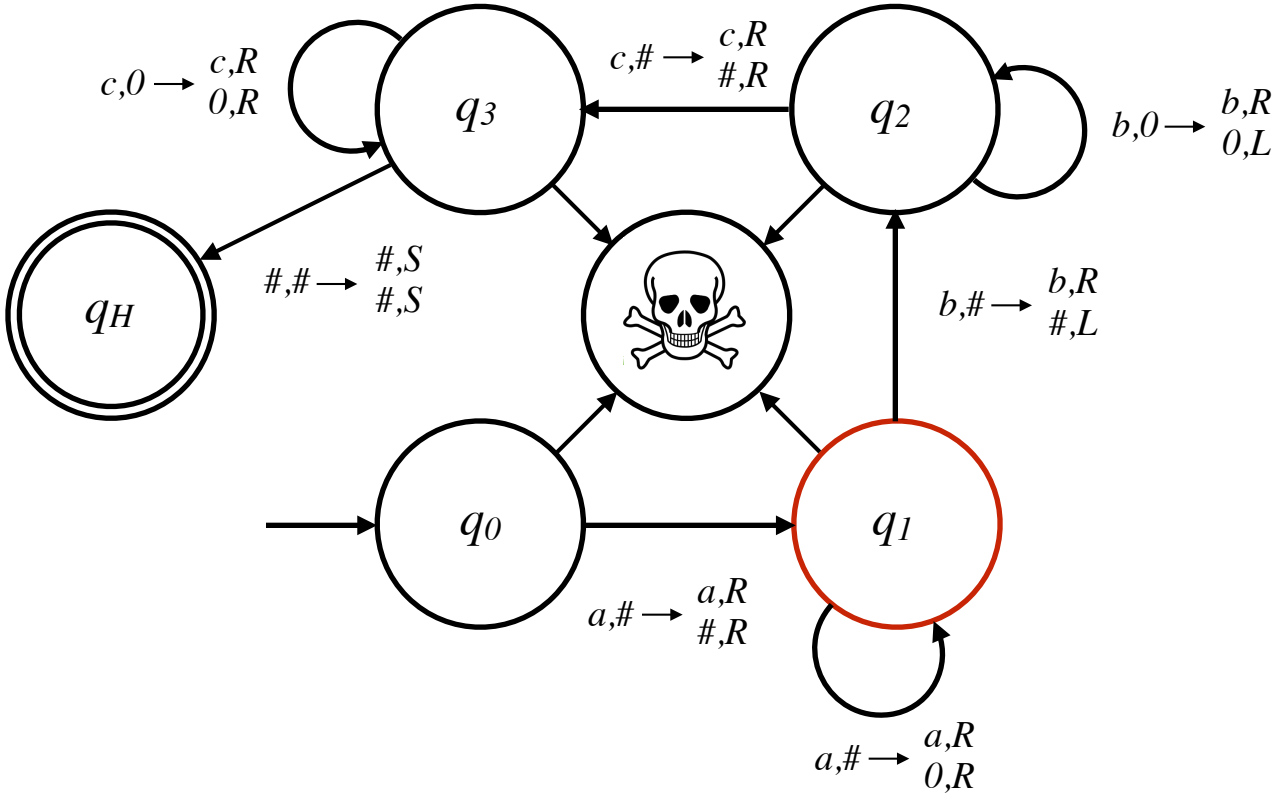
c,0 → c,R 0,R
q3
c,# → c,R #,R
q2
b,0 → b,R 0,L
qH
#,# → #,S #,S
b,# → b,R #,L
q0
q1
a,# → a,R #,R
a,# → a,R 0,R

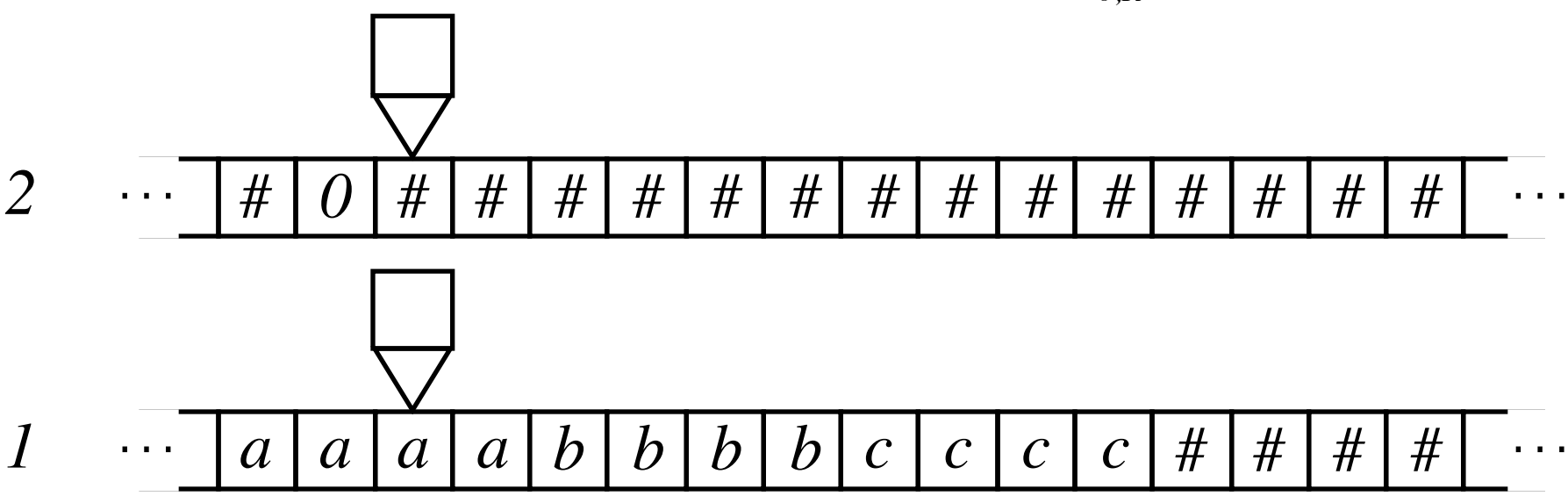
2
0 # # # # # # # # # # # # #
1
a a a a b b b b c c c c # # # #

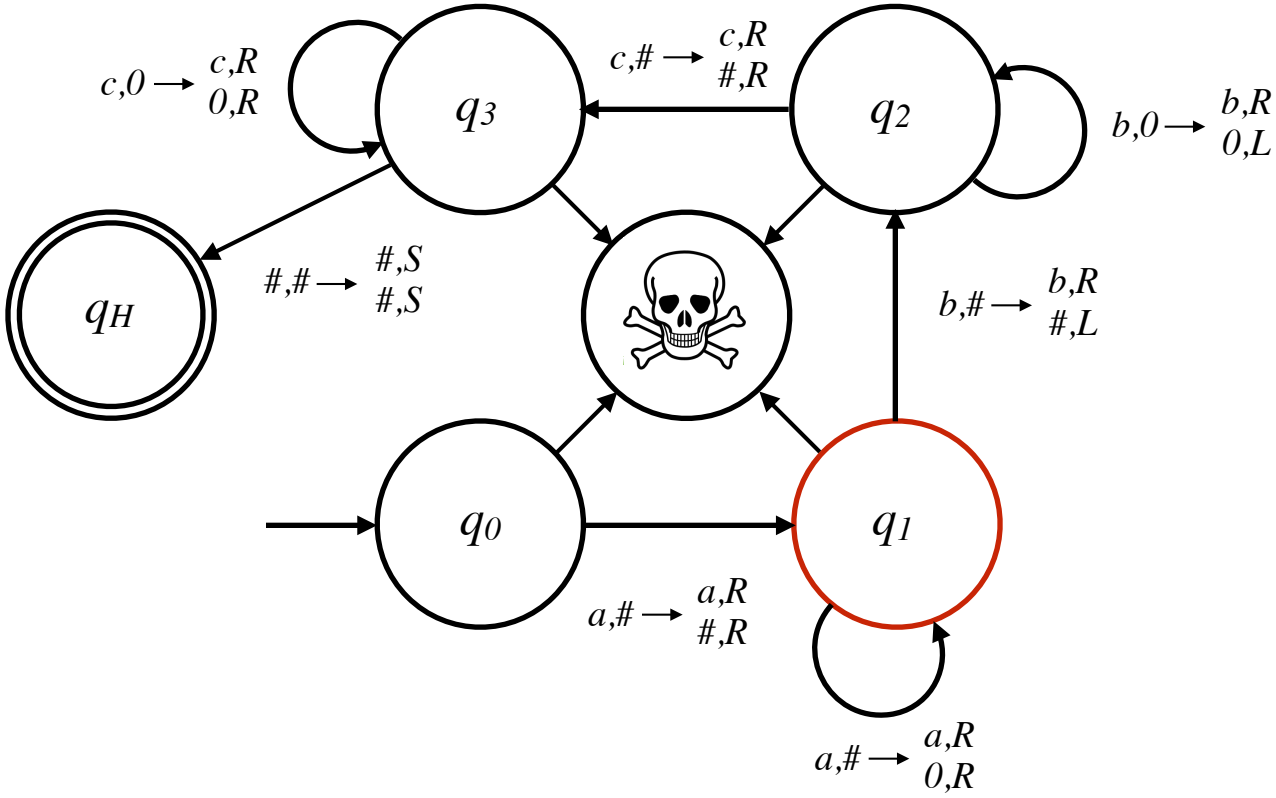
c,0 → c,R 0,R
q3
c,# → c,R #,R
q2
b,0 → b,R 0,L
qH
#,# → #,S #,S
b,# → b,R #,L
q0
q1
a,# → a,R #,R
a,# → a,R 0,R

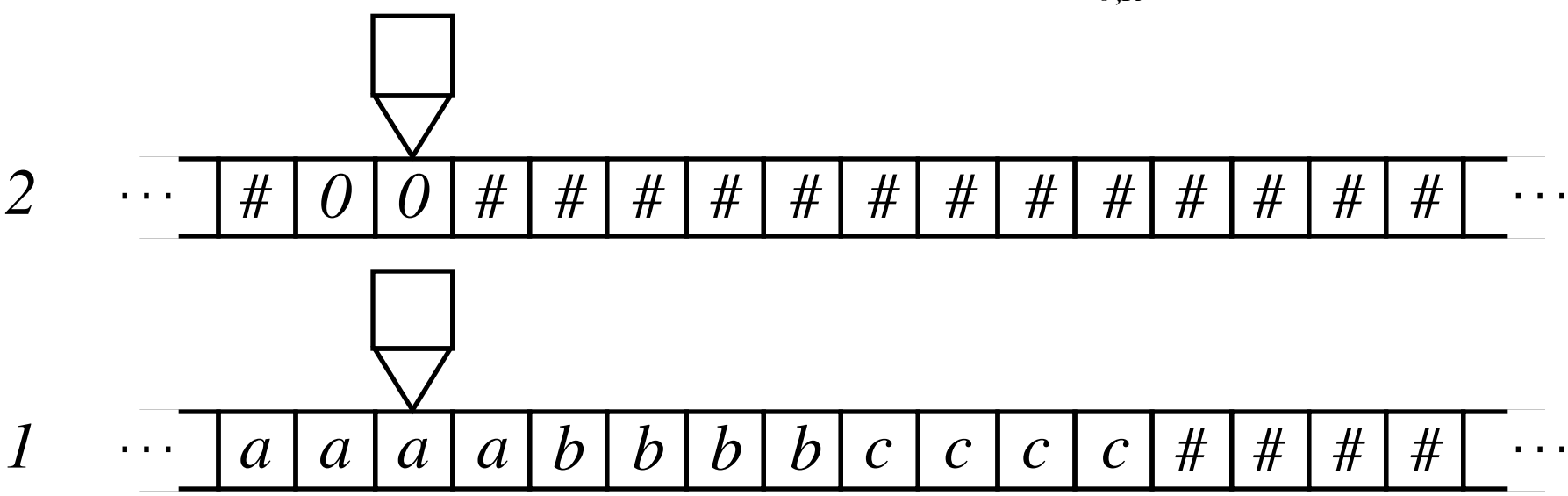
2
0 0 # # # # # # # # # # # #
1
a a a a b b b b c c c c # # # #

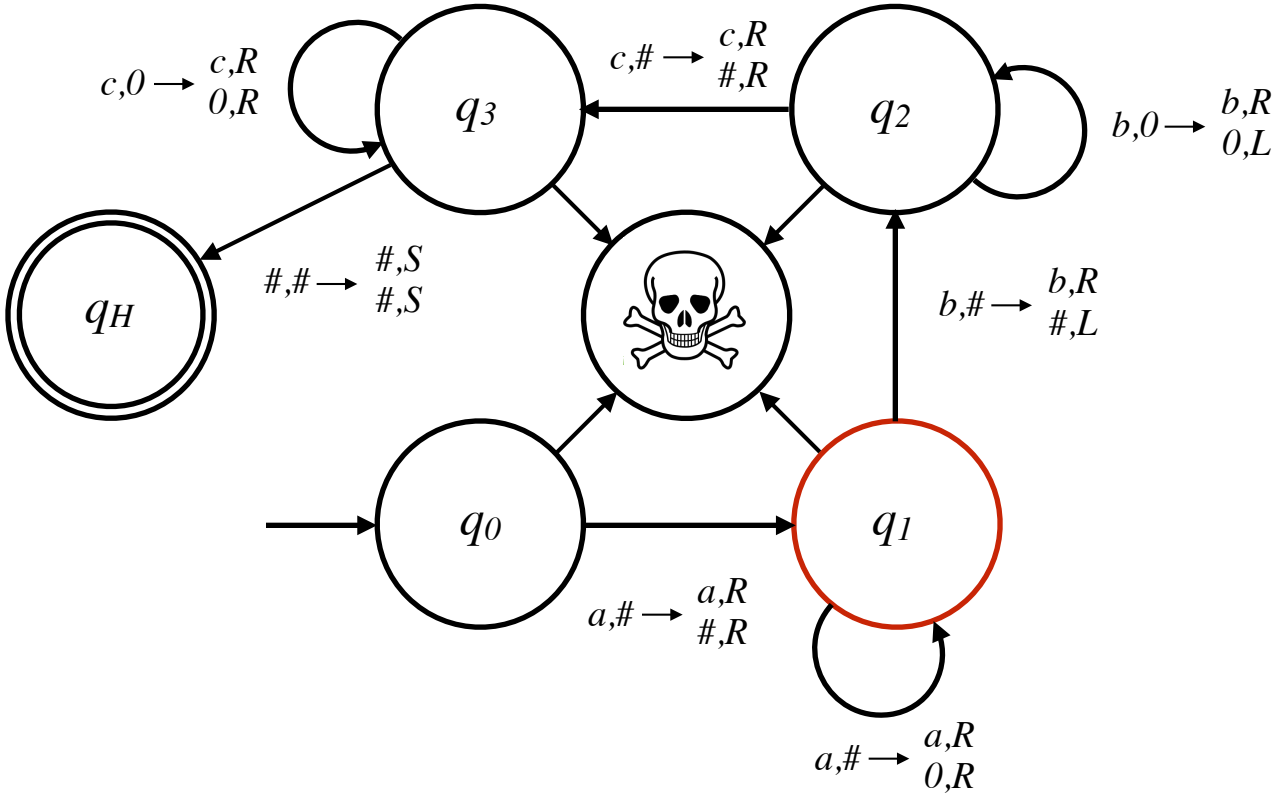
c,0 → c,R 0,R
q3
c,# → c,R #,R
q2
b,0 → b,R 0,L
qH
#,# → #,S #,S
b,# → b,R #,L
q0
q1
a,# → a,R #,R
a,# → a,R 0,R

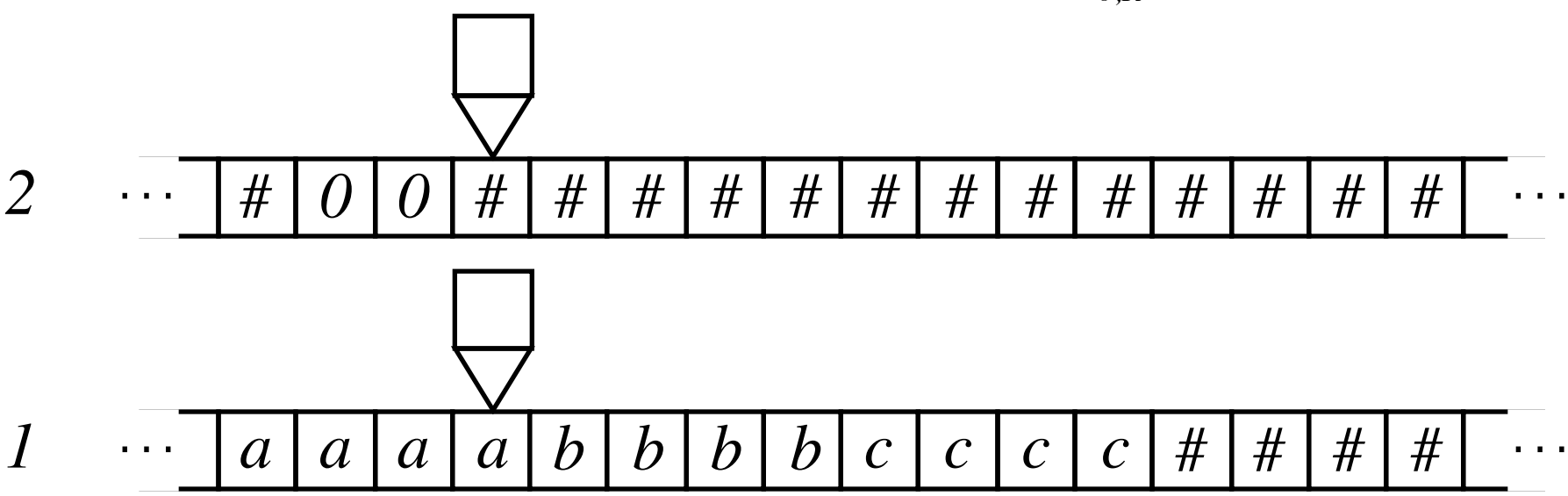
2
0 0 # # # # # # # # # # # #
1
a a a a b b b b c c c c # # # #

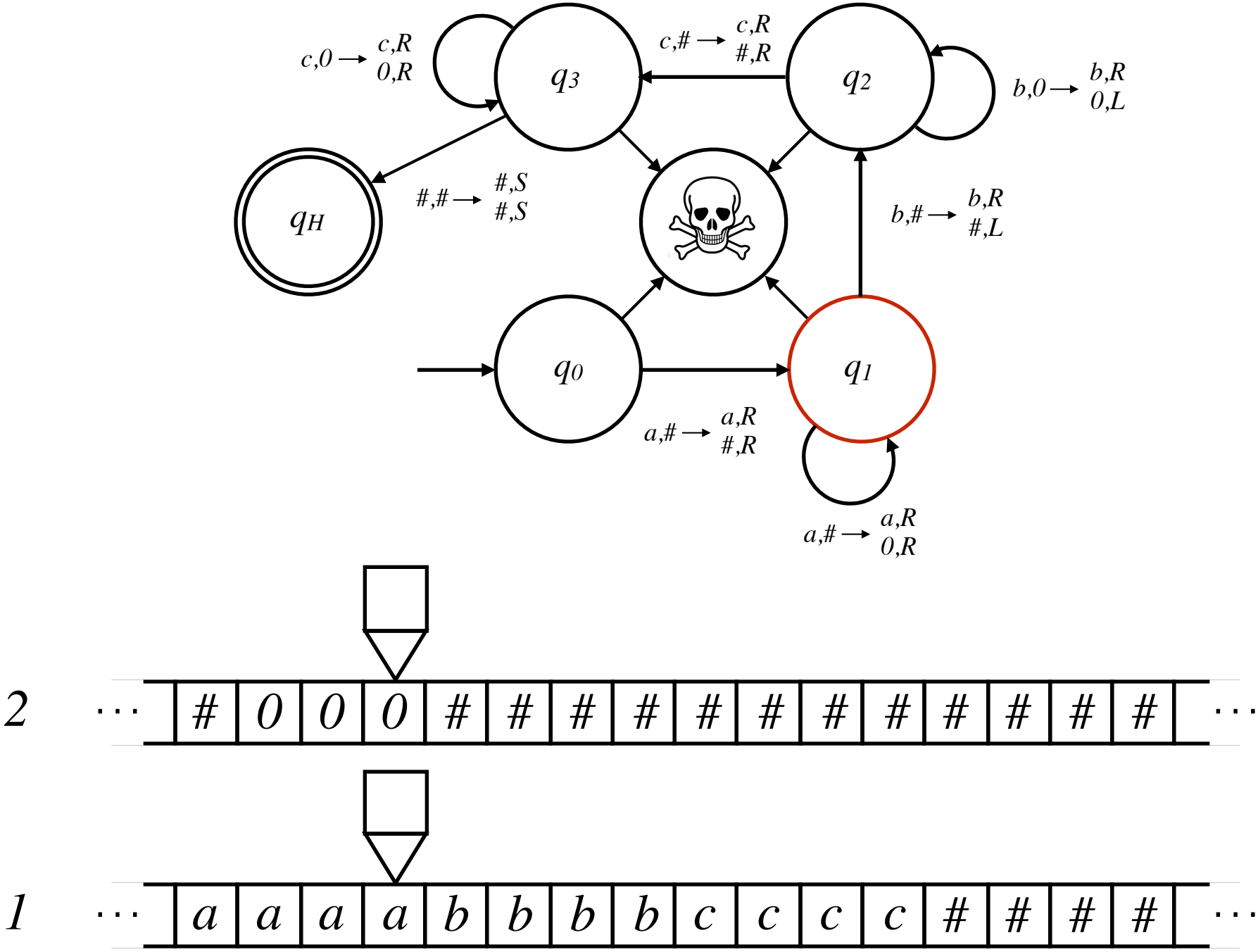
c,0 → c,R 0,R
c,# → c,R #,R
b,0 → b,R 0,L
#,# → #,S #,S
b,# → b,R #,L
a,# → a,R #,R
a,# → a,R 0,R
q3
q2
qH
q0
q1
2
1
0 0 0 # # # # # # # # # # #
a a a a b b b b c c c c # # # #

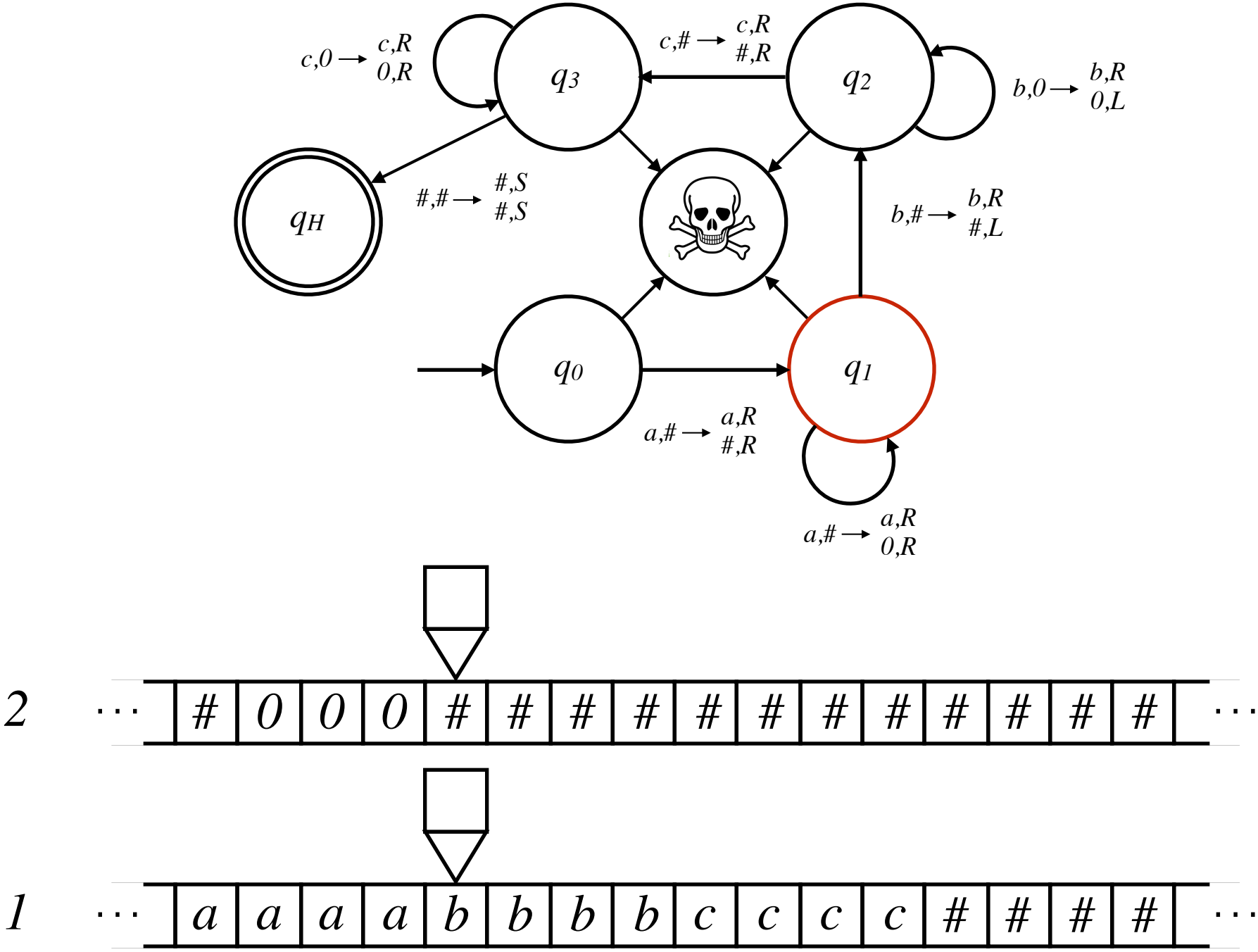
c,0 → c,R 0,R
c,# → c,R #,R
b,0 → b,R 0,L
#,# → #,S #,S
b,# → b,R #,L
a,# → a,R #,R
a,# → a,R 0,R
q3
q2
qH
q0
q1
2
1
0 0 0 # # # # # # # # # # #
a a a a b b b b c c c c # # # #

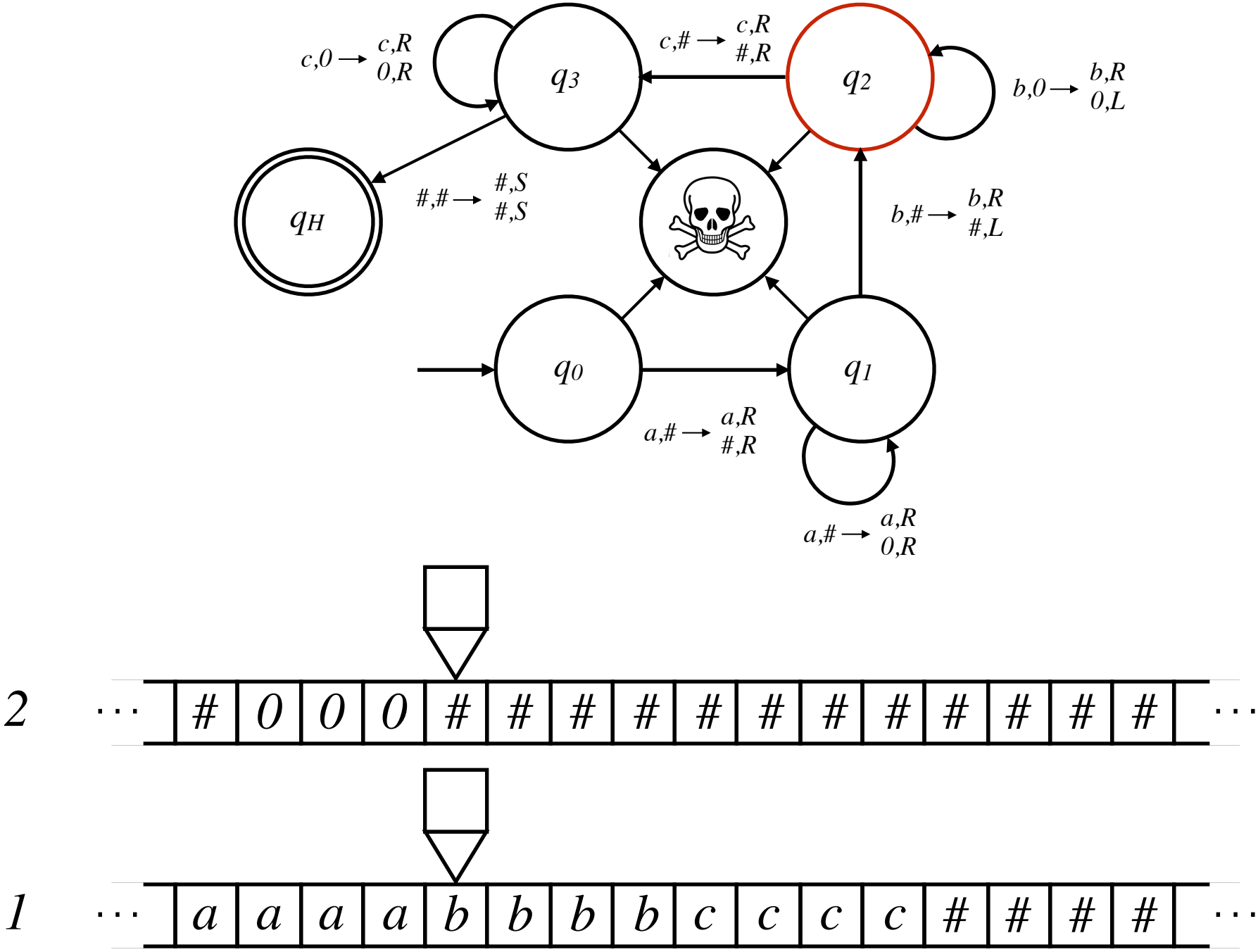
c,0 → c,R 0,R
q3
c,# → c,R #,R
q2
b,0 → b,R 0,L
qH
#,# → #,S #,S
b,# → b,R #,L
q0
q1
a,# → a,R #,R
a,# → a,R 0,R
2
0 0 0 # # # # # # # # # # #
1
a a a a b b b b c c c c # # # #

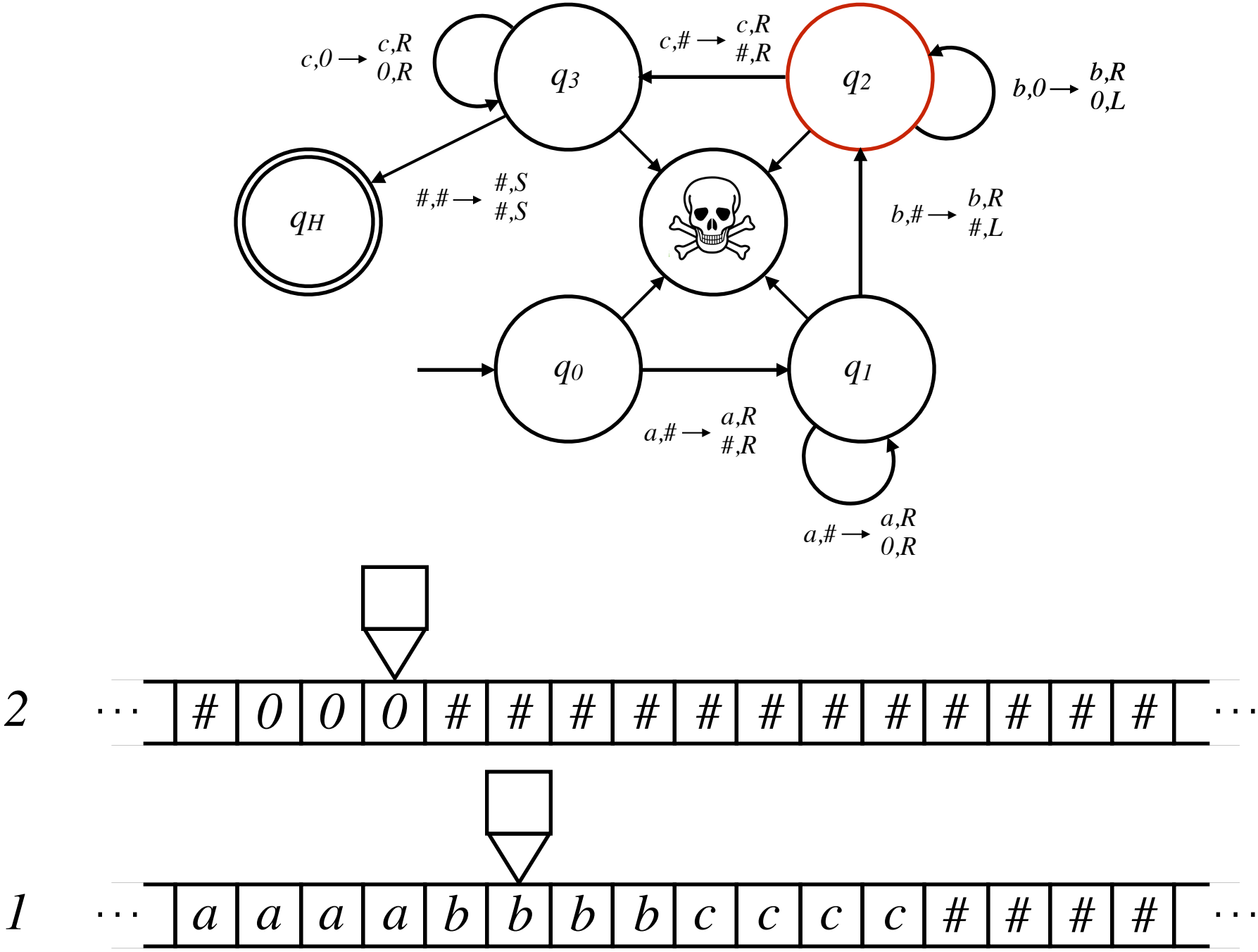
c,0 → c,R 0,R
q3
c,# → c,R #,R
q2
b,0 → b,R 0,L
qH
#,# → #,S #,S
b,# → b,R #,L
q0
q1
a,# → a,R #,R
a,# → a,R 0,R
2
0 0 0 # # # # # # # # # # #
1
a a a a b b b b c c c c # # # #

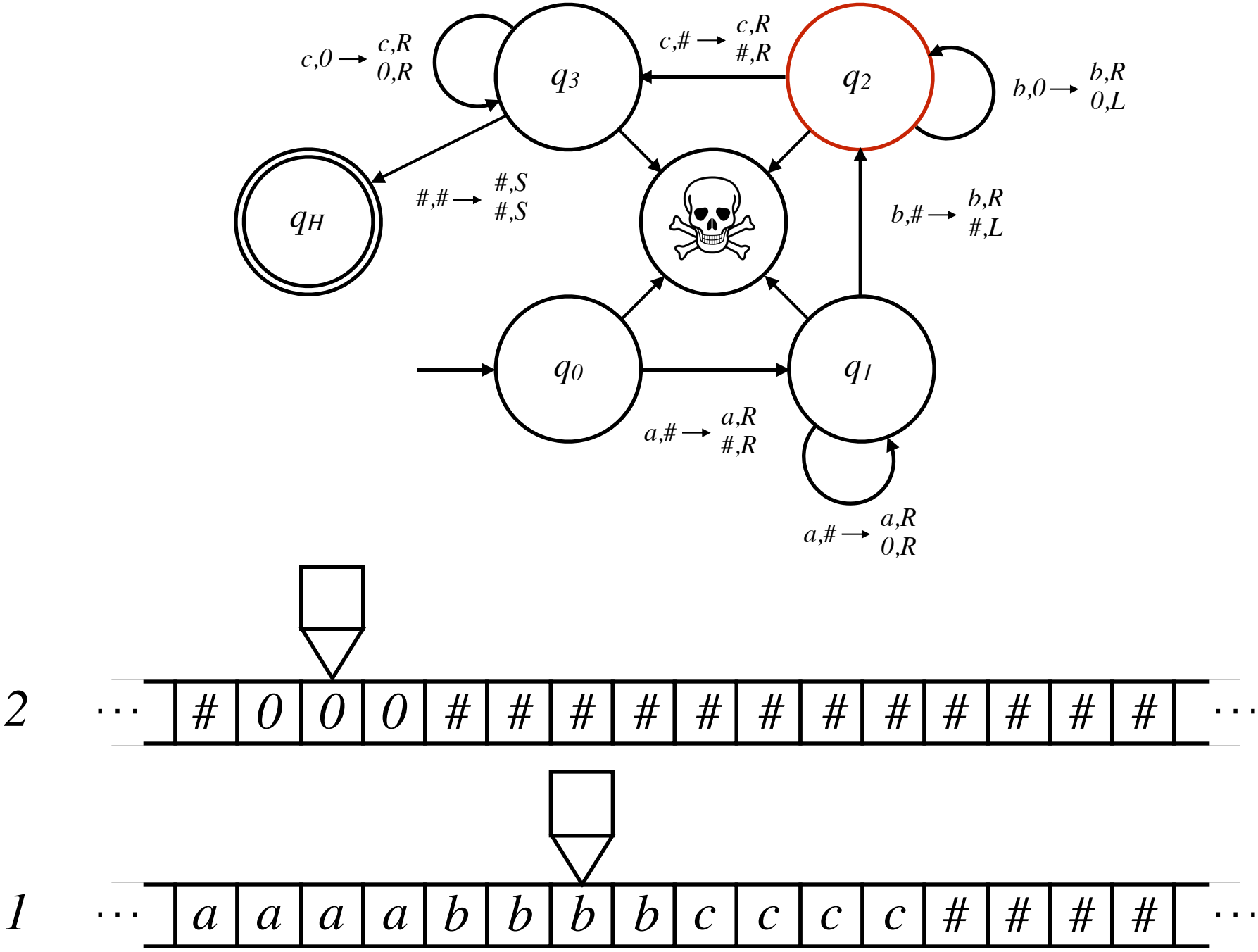
c,0 → c,R 0,R
q3
c,# → c,R #,R
q2
b,0 → b,R 0,L
qH
#,# → #,S #,S
b,# → b,R #,L
q0
q1
a,# → a,R #,R
a,# → a,R 0,R
2
0 0 0 # # # # # # # # # # #
1
a a a a b b b b c c c c # # # #

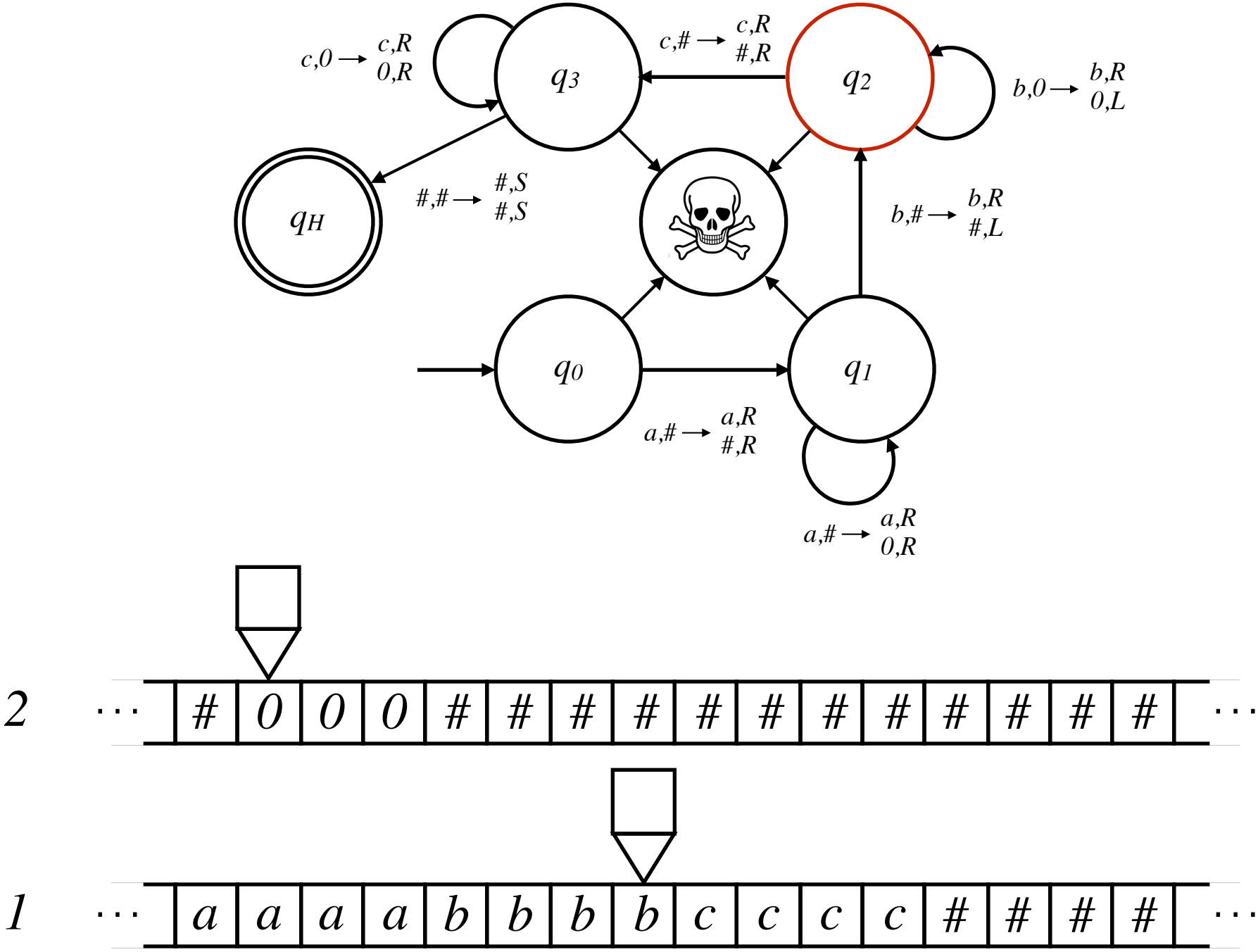
c,0 → c,R 0,R
q3
c,# → c,R #,R
q2
b,0 → b,R 0,L
qH
#,# → #,S #,S
b,# → b,R #,L
q0
q1
a,# → a,R #,R
a,# → a,R 0,R
2
0 0 0 # # # # # # # # # # #
1
a a a a b b b b c c c c # # # #

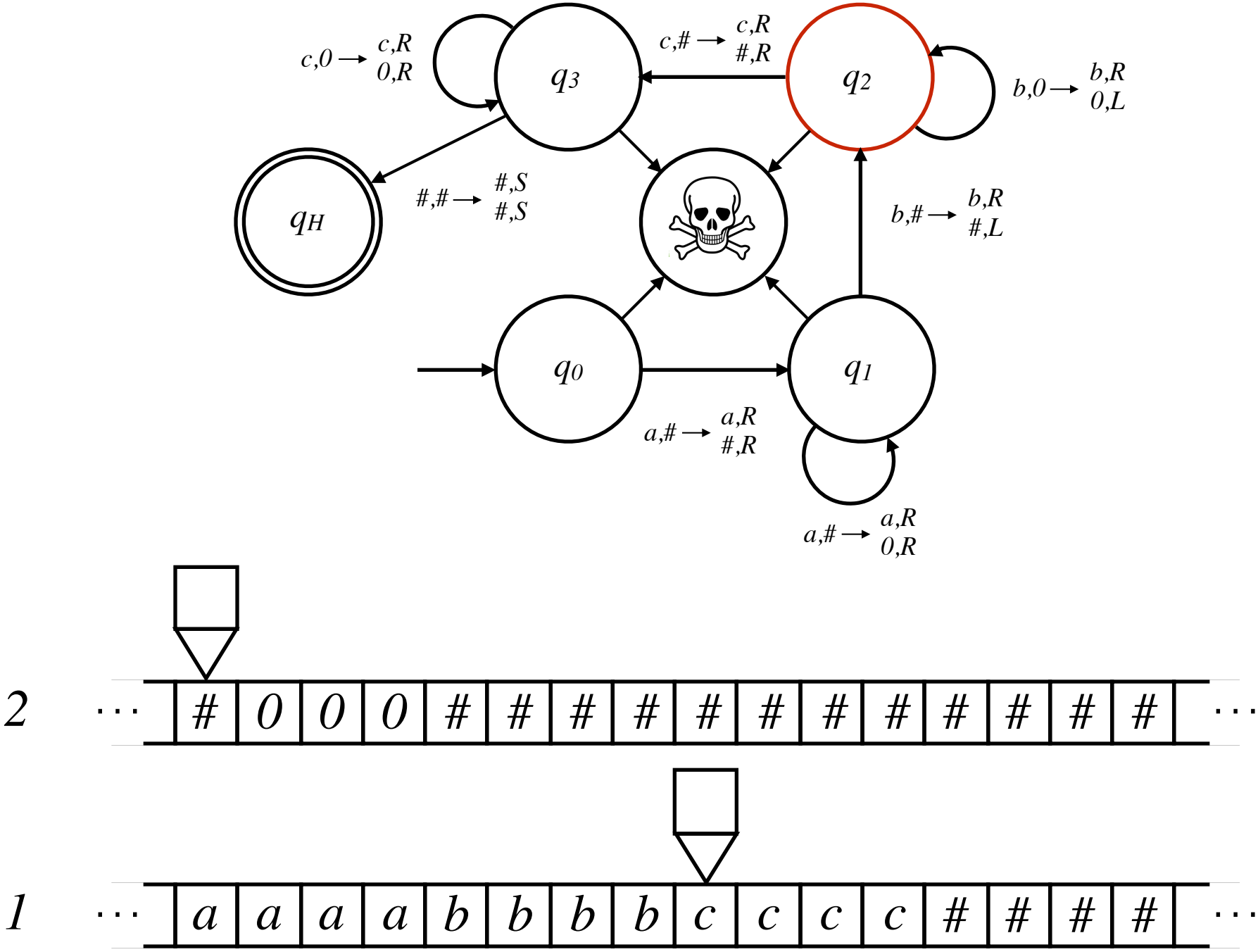
c,0 → c,R 0,R
q3
c,# → c,R #,R
q2
b,0 → b,R 0,L
qH
#,# → #,S #,S
b,# → b,R #,L
q0
q1
a,# → a,R #,R
a,# → a,R 0,R
2
0 0 0 # # # # # # # # # # #
1
a a a a b b b b c c c c # # # #

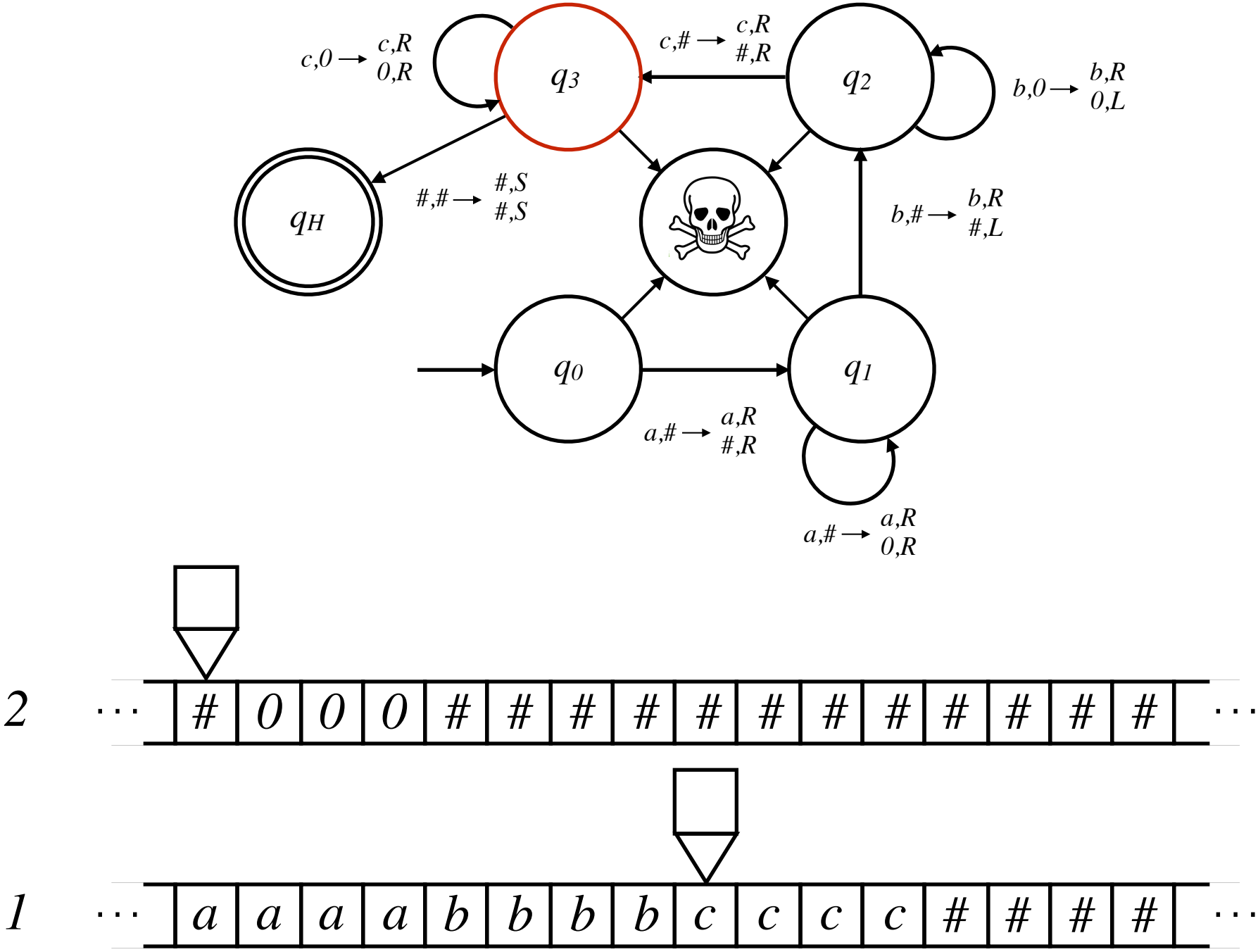
c,0 → c,R 0,R
q3
c,# → c,R #,R
q2
b,0 → b,R 0,L
qH
#,# → #,S #,S
b,# → b,R #,L
q0
q1
a,# → a,R #,R
a,# → a,R 0,R
2
0 0 0 # # # # # # # # # # #
1
a a a a b b b b c c c c # # # #

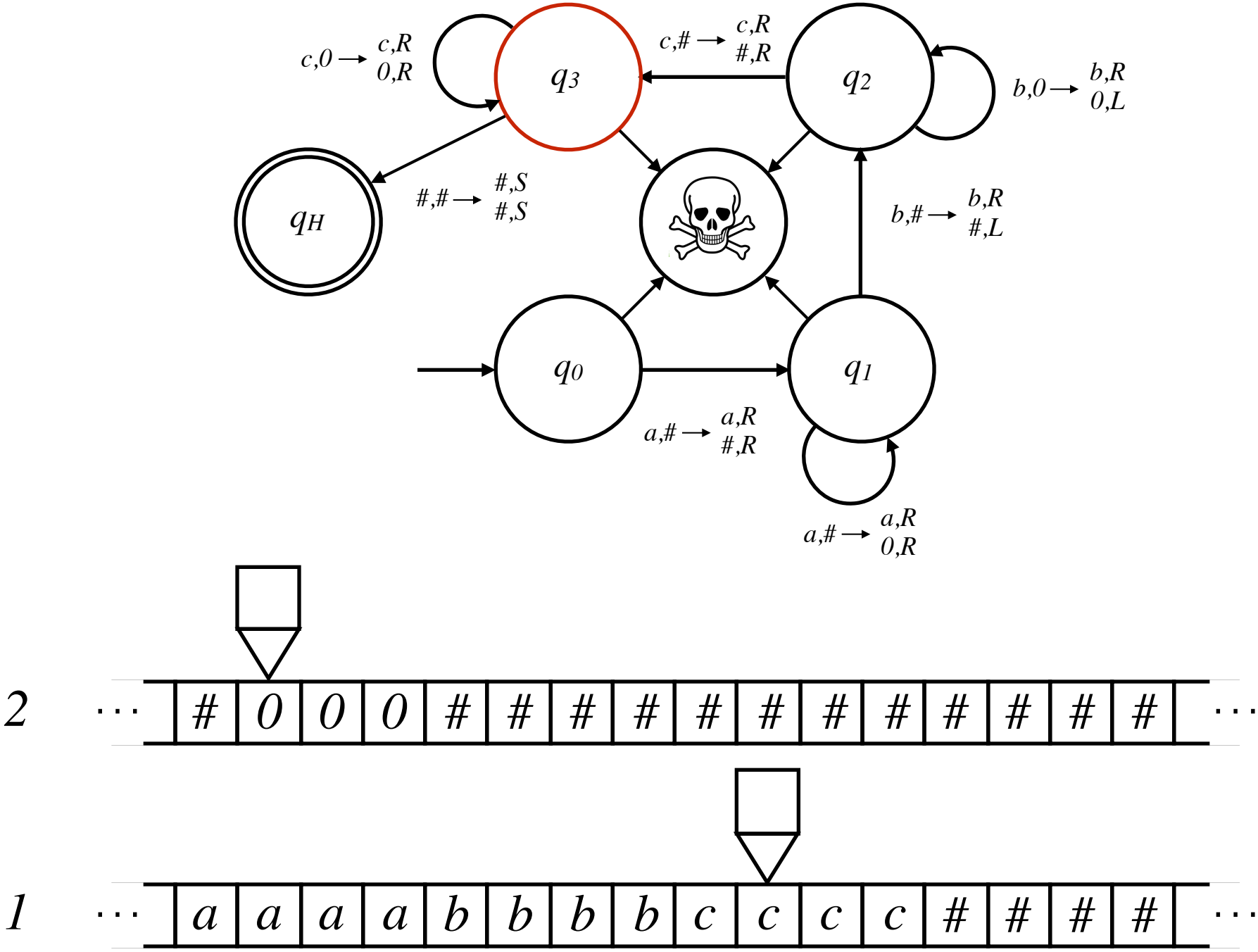
c,0 → c,R 0,R
q3
c,# → c,R #,R
q2
b,0 → b,R 0,L
qH
#,# → #,S #,S
b,# → b,R #,L
q0
q1
a,# → a,R #,R
a,# → a,R 0,R
2
0 0 0 # # # # # # # # # # #
1
a a a a b b b b c c c c # # # #

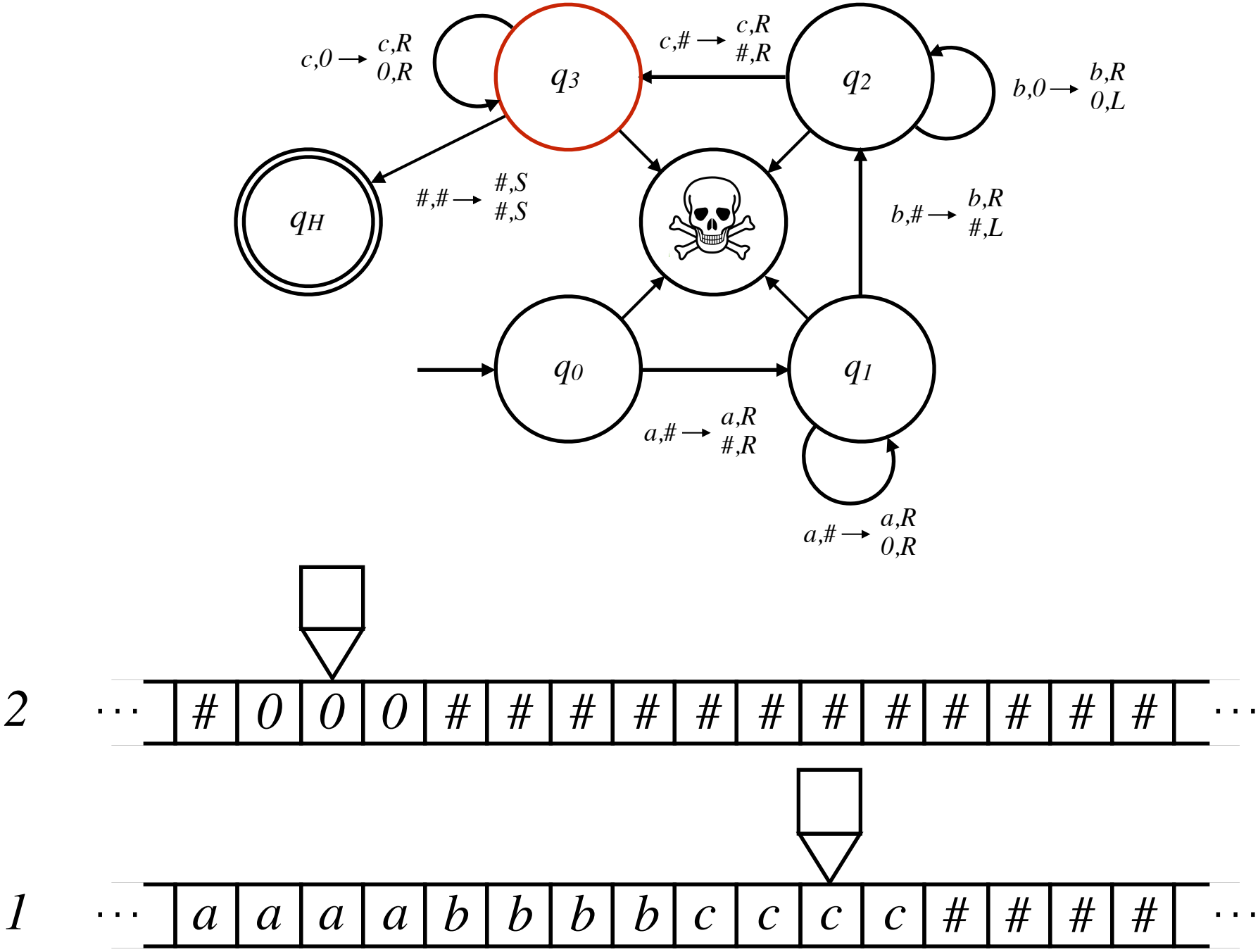
c,0 → c,R 0,R
q3
c,# → c,R #,R
q2
b,0 → b,R 0,L
qH
#,# → #,S #,S
b,# → b,R #,L
q0
q1
a,# → a,R #,R
a,# → a,R 0,R
2
0 0 0 # # # # # # # # # # #
1
a a a a b b b b c c c c # # # #

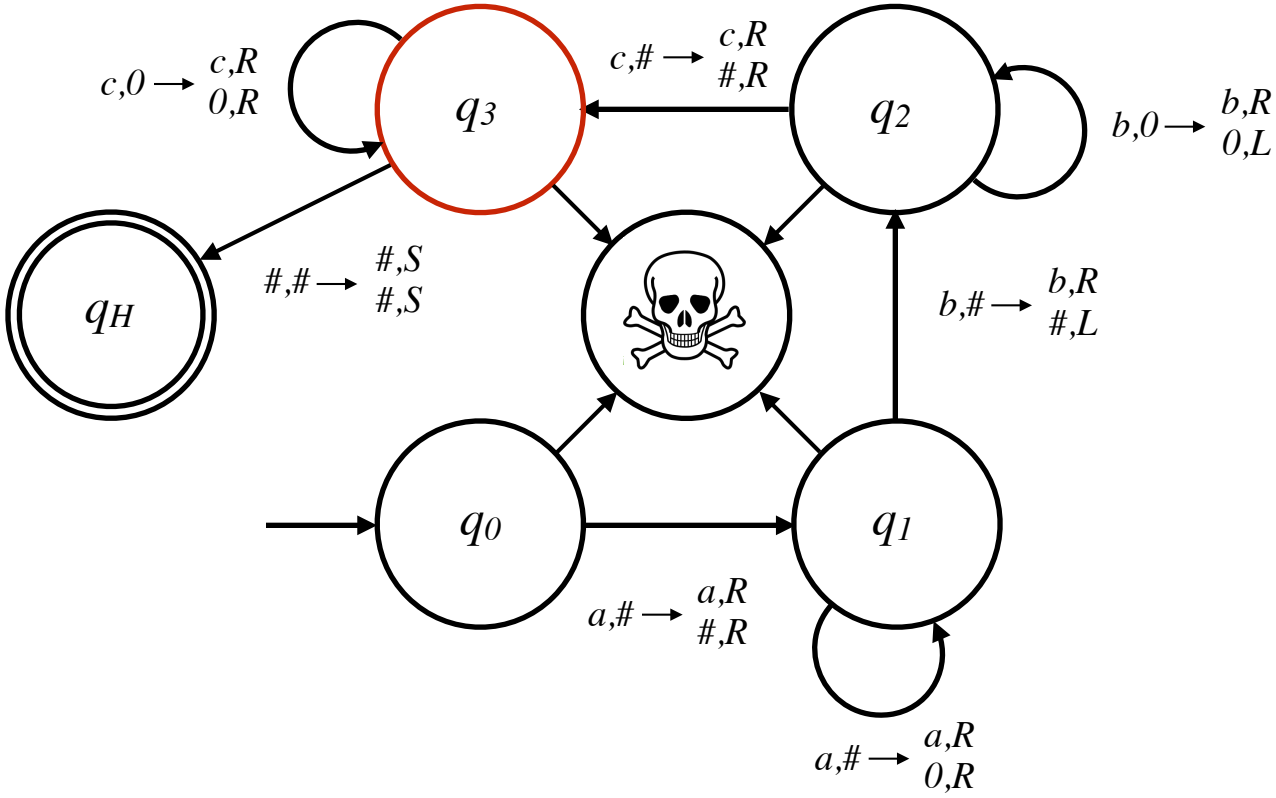
c,0 → c,R 0,R
q3
c,# → c,R #,R
q2
b,0 → b,R 0,L
qH
#,# → #,S #,S
b,# → b,R #,L
q0
q1
a,# → a,R #,R
a,# → a,R 0,R

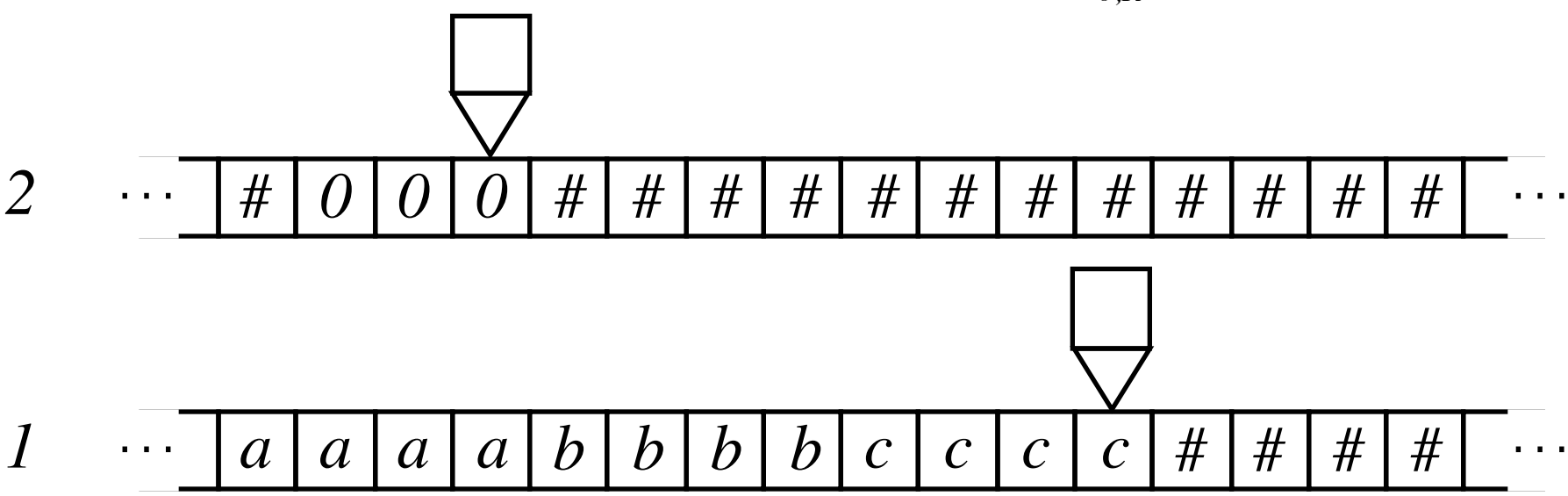
2
0 0 0 # # # # # # # # # # #
1
a a a a b b b b c c c c # # # #

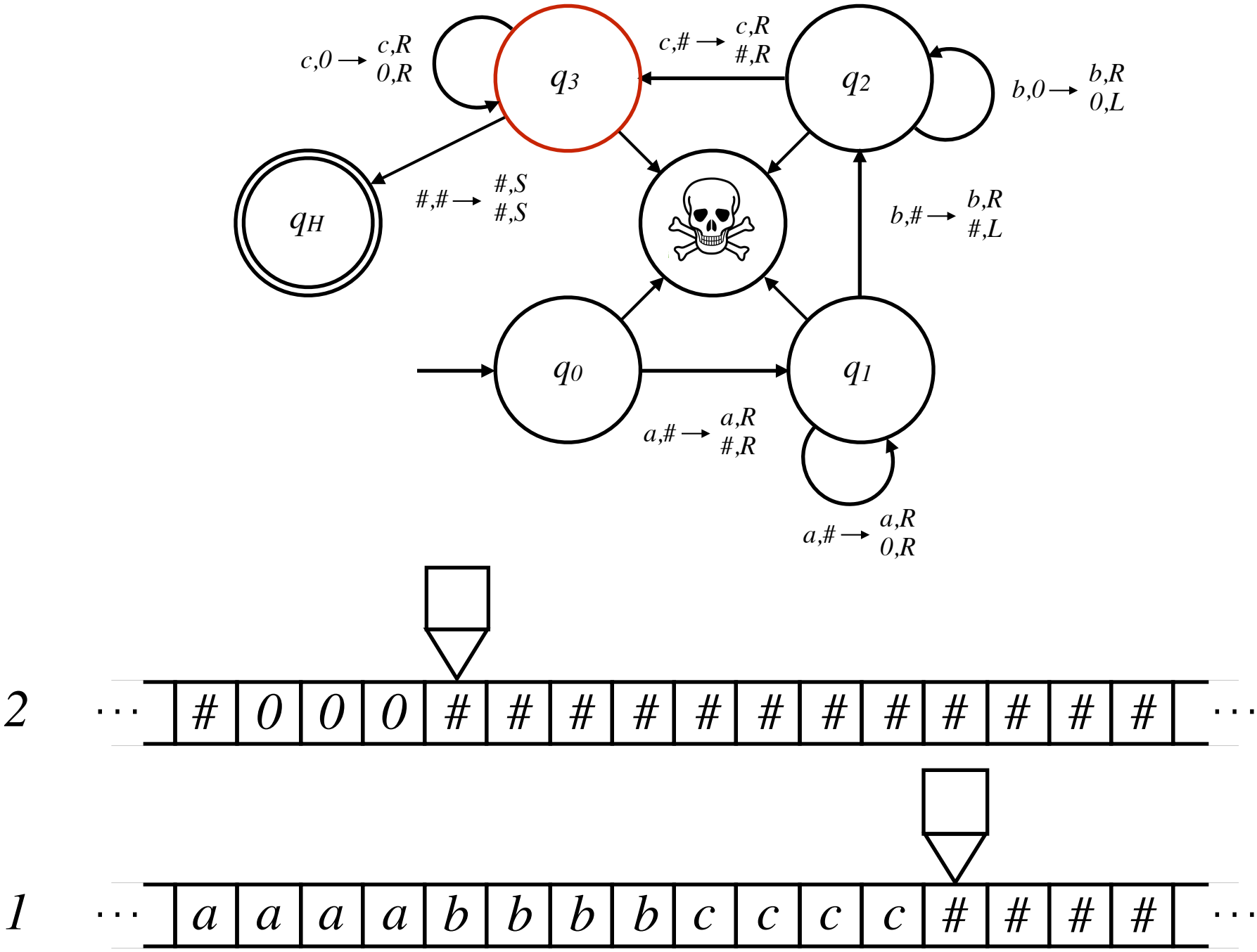
c,0 → c,R 0,R
q3
c,# → c,R #,R
q2
b,0 → b,R 0,L
qH
#,# → #,S #,S
b,# → b,R #,L
q0
q1
a,# → a,R #,R
a,# → a,R 0,R
2
1
0 0 0 # # # # # # # # # # #
a a a a b b b b c c c c # # # #

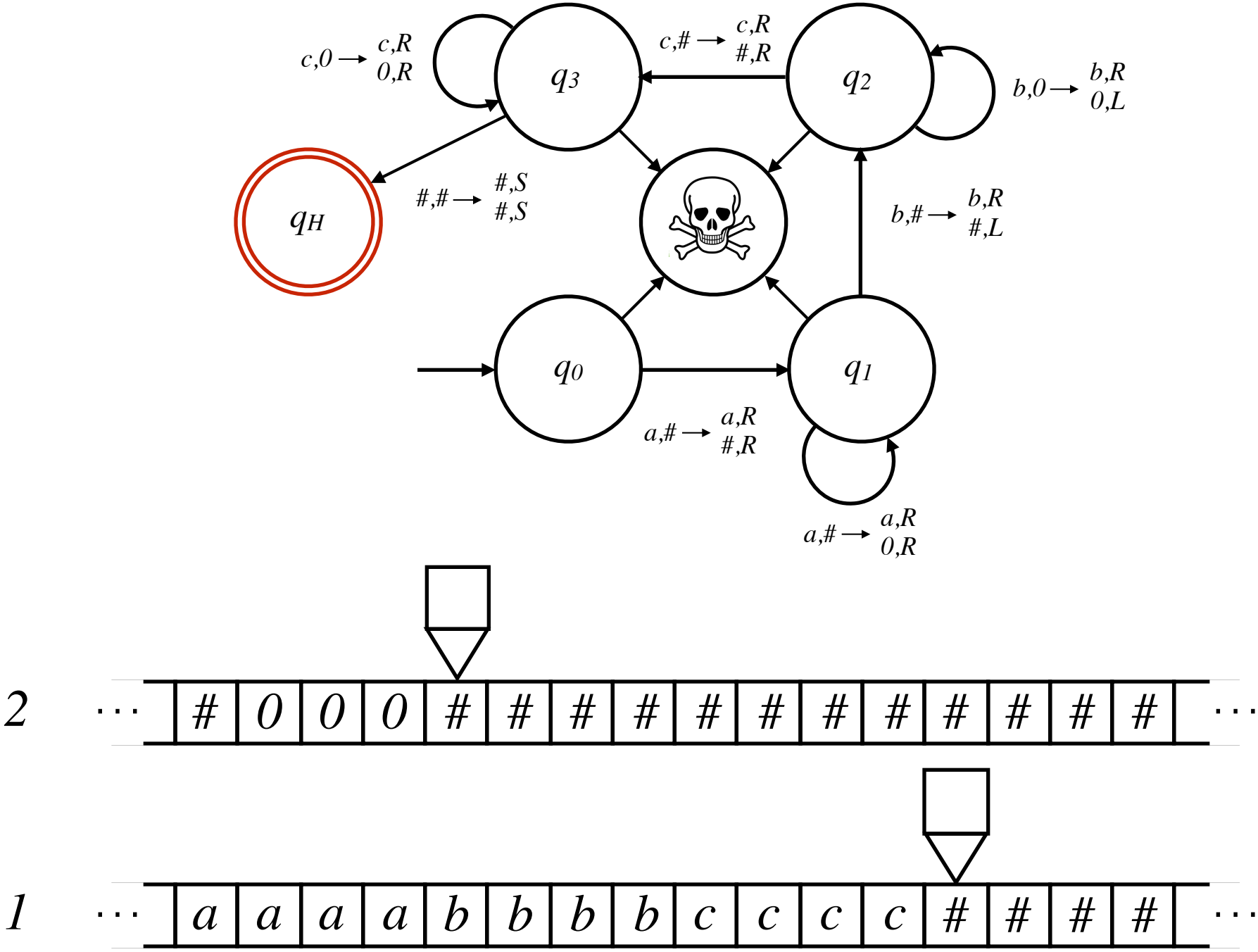
c,0 → c,R 0,R
c,# → c,R #,R
b,0 → b,R 0,L
#,# → #,S #,S
b,# → b,R #,L
a,# → a,R #,R
a,# → a,R 0,R
q3
q2
qH
q0
q1
2
1
0 0 0 # # # # # # # # # # #
a a a a b b b b c c c c # # # #

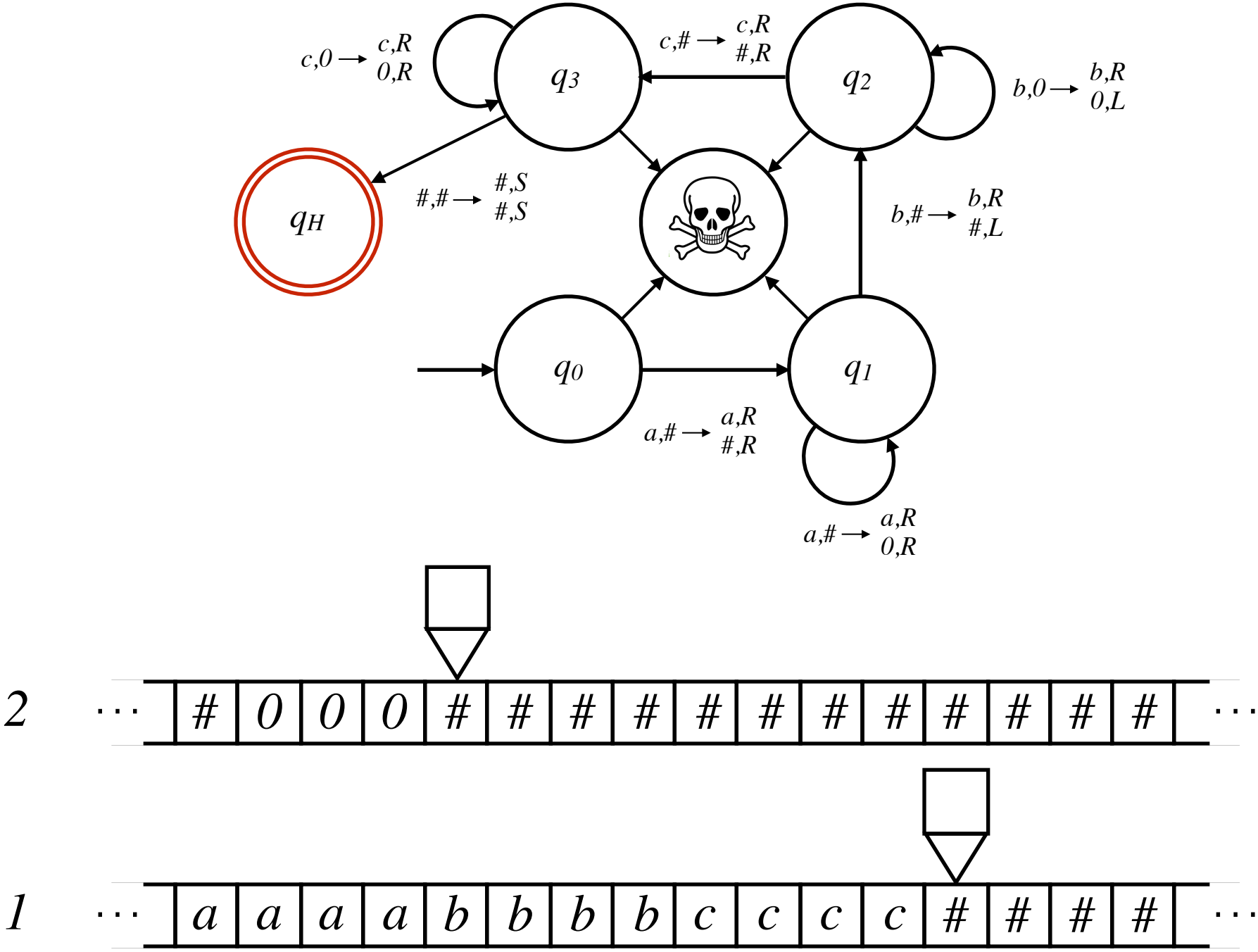
c,0 → c,R 0,R
c,# → c,R #,R
b,0 → b,R 0,L
#,# → #,S #,S
b,# → b,R #,L
a,# → a,R #,R
a,# → a,R 0,R
q3
q2
qH
q0
q1
2
1
0 0 0 # # # # # # # # # # #
a a a a b b b b c c c c # # # #